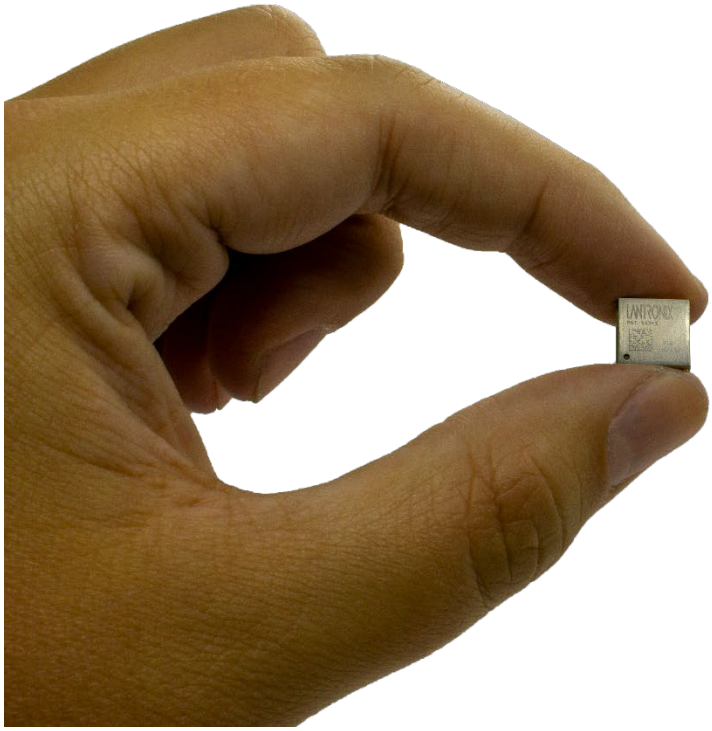

PNT-SG4FM GNSS Module
Hardware User Guide

Part Number PMD-00277
Revision A October 2024

Intellectual Property

Patented: https://www.lantronix.com/legal/patents. Additional patents pending.

Warranty

For details on the Lantronix warranty policy, please go to our web site at https://www.lantronix.com/technical-support/warranty/.

Contacts

Lantronix, Inc.
48 Discovery, Suite 250
Irvine, CA 92618, USA
Toll Free: 800-526-8766
Phone: 949-453-3990
Fax: 949-453-3995

Technical Support
Online: https://www.lantronix.com/technical-support/

Sales Offices
For a current list of our domestic and international sales offices, go to the Lantronix web site at https://www.lantronix.com/about-us/contact/.

Disclaimer

All information contained herein is provided “AS IS”. Lantronix undertakes no obligation to update the information in this publication. Lantronix does not make, and specifically disclaims, all warranties of any kind (express, implied, or otherwise) regarding title, non-infringement, fitness, quality, accuracy, completeness, usefulness, suitability or performance of the information provided herein. Lantronix shall have no liability whatsoever to any user for any damages, losses and causes of action (whether in contract or in tort or otherwise) in connection with the user’s access or usage of any of the information or content contained herein. The information and specifications contained in this document are subject to change without notice.

Revision History

Date	Rev.	Comments
October 2024	A	Initial release.

For the latest revision of this product document, please check our online documentation at https://www.lantronix.com/documentation/.

Table of Contents

List of Figures 5
List of Tables 6

1. Introduction 7
Overview 7

2. Power 8
VCC 8
VBAT 8
VCC_RF 8
Power Supply Design Reference 8
Current Consumption Optimization 9

3. Reserved Pins 10

4. Interfaces 11
I2C 11
UART 11

5. I/O Pins 12
PPS 12
WakeUP 12
nRESET 12
RF_IN 13
PRG 13

6. Standby Mode 14

7. Front End Management 15
Passive Antenna 15
External LNA 16
Active Antenna 17

8. Layout Recommendations 18

List of Figures

Figure 1: PNT-SG4FM Pin Out 7
Figure 2: Power Supply Filtering 8
Figure 3: Example of SMPS to Improve Current Consumption 9
Figure 4. Reset (RESETn Pin) Minimum Timing 12
Figure 5: PNT-SG4FM Passive Antenna Connection 15
Figure 6: External LNA Connection 16
Figure 7. External Antenna Control 17
Figure 8: Parallel Component Pads Position 18
Figure 9: Bypass Component Pads Position 18

List of Tables

Table 1. Reset Minimum Timing _____ 12

1. Introduction

Overview

This document is relevant to PNT-SG4FM, a Global Navigation Satellite System (GNSS) standalone module with an integrated Teseo IV receiver from ST Microelectronics. The multi-constellation receiver can track satellite signals in view across GPS L1C/A + L5C, BeiDou B1i/B2a, Galileo E1/E5a, GLONASS L1OF, SBAS L1C/A, and QZSS L1C/A + L5C bands. The module supports Differential GPS (DGPS) data according to RTCM 10402.3. Assisted GNSS algorithms support extended ephemeris data using server-based solutions for fast Time to First Fix (TTFF) operation.

The module can output measurement data (carrier phase) supporting RTK/PPP client algorithms for precise positioning applications by using a dedicated firmware for this purpose.

The module supports 3.3V power supply domains and an embedded 8 Mb flash memory that enables support for firmware updates. The PNT-SG4FM module further integrates a temperature-compensated crystal oscillator (TCXO) for navigation performance and stability, built-in LNA and SAW, and a real-time clock (RTC) oscillator with a clock-trimming feature to compensate for the accuracy of the 32.768 kHz crystal.

Figure 1 shows the pin out of the module.

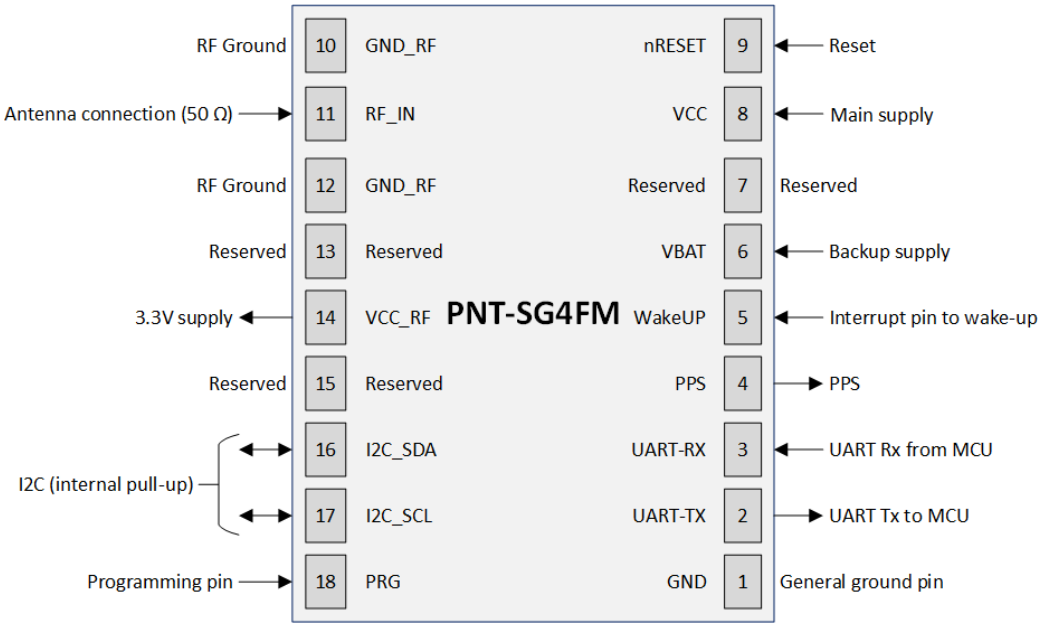

Figure 1: PNT-SG4FM Pin Out

2. Power

The PNT-SG4FM is supplied with 2 power pins: VCC (pin 8) and VBAT (pin 6).

VCC

VCC (pin 8) is the main supply. The VCC voltage range is specified in the PNT-SG4FM datasheet.

During startup or low power application, current can change suddenly. It is important that supply IC can provide this current variability. Use LDO above 200 mA.

VBAT

VBAT (pin 6) is the supply for the low-power domain backup: RAM and RTC.

VBAT can be either connected to VCC, or it can be connected to a dedicated always-on power supply. Supplying power to VBAT during low-power mode enables fast recovery of GNSS fix.

If no backup power supply is available, leave the VBAT pin floating.

VCC_RF

VCC_RF (pin 14) is an output supply for an external active antenna. The current is limited to 35 mA.

Power Supply Design Reference

If power supply is undisturbed, no filtering is required. Nevertheless, it could be planned for a first PCB to have soldering pads as shown in Figure 2 below for filtering.

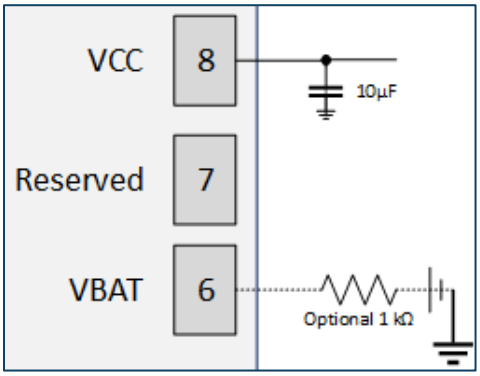

Figure 2: Power Supply Filtering

Note: *Decoupling capacitor must be placed close to module pin.*

Current Consumption Optimization

Use of an SMPS at 1.8 V to supply VCC is recommended to optimize current consumption.

Figure 3 is an application example with an external switching voltage regulator in order to achieve an efficiency of around 85%.

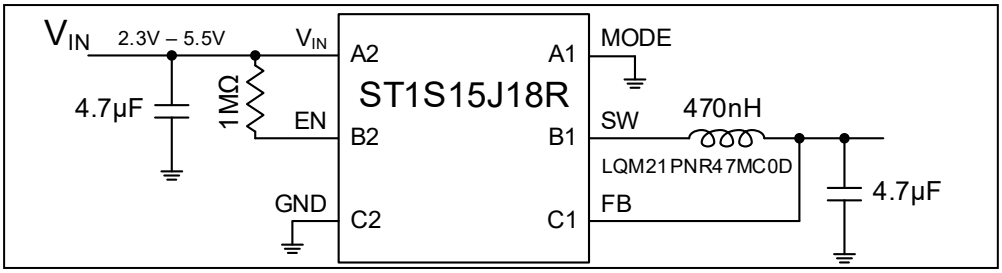

Figure 3: Example of SMPS to Improve Current Consumption

3. Reserved Pins

Pin 7, pin 13, and pin 15 are reserved on the PNT-SG4FM; these pins should be left as floating.

4. Interfaces

I2C

I2C (pins 16, 17) is in slave only.

Internal 4.7 kΩ pull-up resistors on VCC_IO are present. It is important to avoid having other pull-ups for current leakage in low-power mode.

UART

The UARTs (Universal Asynchronous Receiver/Transmitter) (pins 2, 3) support many of the same functions as the industry-standard 16C650 UART.

The PNT-SG4FM UARTs vary from the 16C650 on some minor points:

- Receive FIFO trigger levels
- Internal register map address space, and bit function of each register
- Deltas of modem status signals are not available
- 1.5 stop bits are not supported
- Independent receive clock feature is not supported

5. I/O Pins

PPS

PPS (pin 4) is the time pulse every one second. It can be configured with different conditions of pulses.

WakeUP

WakeUP (pin 5) is an external interrupt used to wake up the PNT-SG4FM for asynchronous wake-up during standby.

If not used, leave it floating.

nRESET

nRESET (pin 9) can force a PNT-SG4FM under reset.

Reset signal is active low.

The host processor must have full control of this pin to support firmware upgrades. Do not use pullup or pulldown when connecting to MCU.

Table 1. Reset Minimum Timing

Parameter	Symbol	Pin	Condition	Min	Typ	Max	Unit
Reset input time	t_{RSTL}	nRESET	There is power supply and the oscillator is active	100	--	--	mS

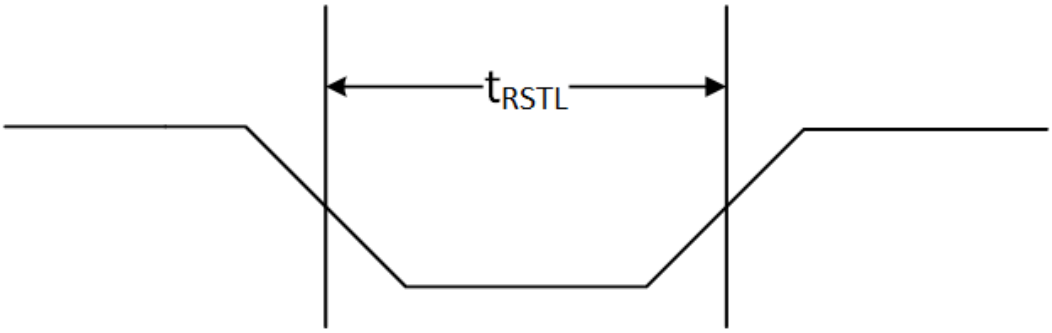

Figure 4. Reset (RESETn Pin) Minimum Timing

RF_IN

RF_IN (pin 11) is the RF input.

Refer to section 7: *Front End Management* for details associated with antenna selection to RF_IN since an external decoupling capacitor may be required. It is recommended to include a 0402 footprint that can be used with a 0-ohm resistor or a 56 pF decoupling capacitor as required. For example, with a passive antenna, the board would populate a 0-ohm resistor for a PNT-SG3FS module and a 56 pF decoupling capacitor for a PNT-SG4FM module.

DC (equal to VCC voltage) is present on the PNT-SG4FM.

PRG

Keep Pin 18 floating during system power-up or the external reset (RESETn from low to high) and the module will enter User Normal Mode.

Pin 18 is a programming pin used to program the module in production line.

Leave PRG pin floating.

6. Standby Mode

Standby mode is the mode where only low-power backup domain is running and VCC is off. It means VBAT must always be maintained. This allows very low current consumption and fast GNSS reacquisition at the end of the standby time due to RTC.

The PNT-SG4FM offers one standby mode: hardware standby.

As IO buffers are not supplied during standby mode, it is important to keep all IOs without external voltage to avoid any current leakage.

7. Front End Management

RF input impedance is 50 ohms.

Passive Antenna

A passive antenna, as shown in Figure 5 below, can be directly connected to the PNT-SG4FM.

Take care that the antenna is close to the module. In addition, an impedance-matching component might be necessary to match the antenna.

As RF_IN provides power to the antenna, a DC cut capacitor could be necessary in case the antenna presents a DC GND shortcut.

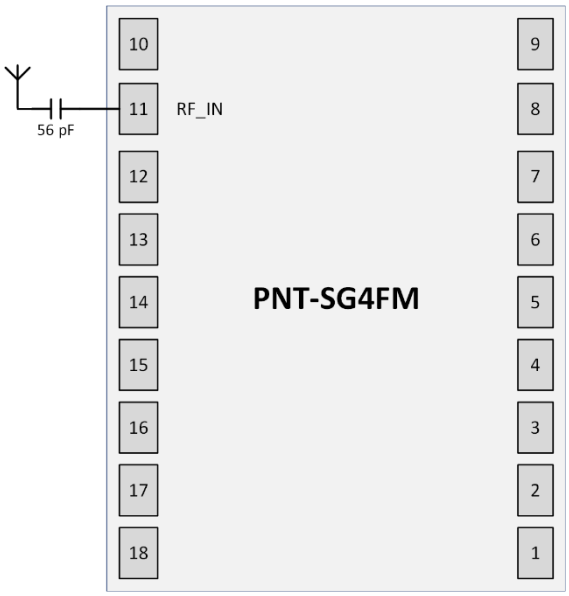

Figure 5: PNT-SG4FM Passive Antenna Connection

External LNA

External LNA means a passive antenna used with an LNA on the same PCB as the PNT-SG4FM module. The PNT-SG4FM has built-in LNA and SAW. It is recommended to use an LNA with gain less than 36 dB and noise figure less than 1.5 dB.

Figure 6 below shows a block diagram of the LNA connection.

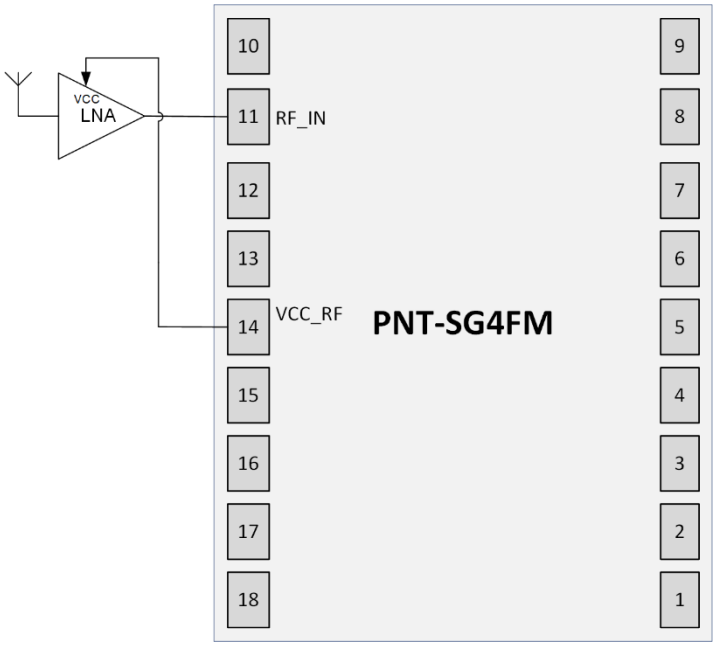

Figure 6: External LNA Connection

Active Antenna

The PNT-SG4FM has built-in LNA and SAW. It is recommended to use an active antenna with gain less than 36 dB and noise figure less than 1.5 dB.

The active antenna can be supplied directly via RF_IN supply.

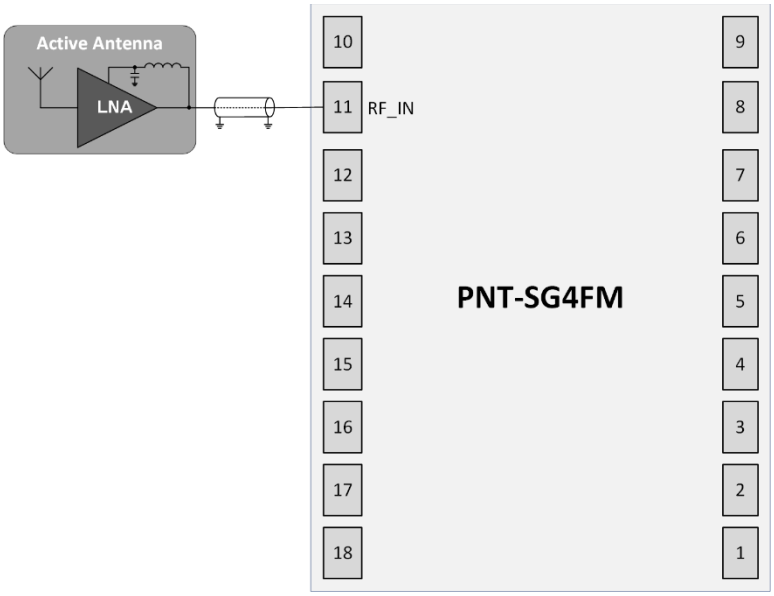

Figure 7. External Antenna Control

8. Layout Recommendations

It is important to have a whole ground plane below the PNT-SG4FM module. Avoid any signals below the PNT-SG4FM.

Do not place the module close to any EMI sources such as antenna(s), RF routing, DC/DC or power conductor, clock signal or other high-frequency switching signal, etc.

For RF-passive components, use of 0402 (1 x 0.5 mm) components is recommended. Please choose the RF ground layer to be able to get 50 Ω RF line width as close as possible to the component pads.

On 50 Ω RF line it is important to avoid all possible stubs:

- For parallel components, place one pad on the RF line

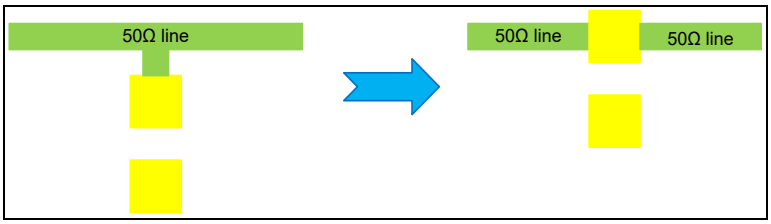

Figure 8: Parallel Component Pads Position

- If a bypass is needed, superimpose the two pads in one as shown in Figure 9 below.

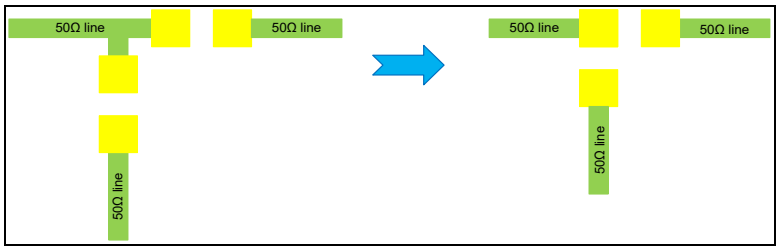

Figure 9: Bypass Component Pads Position